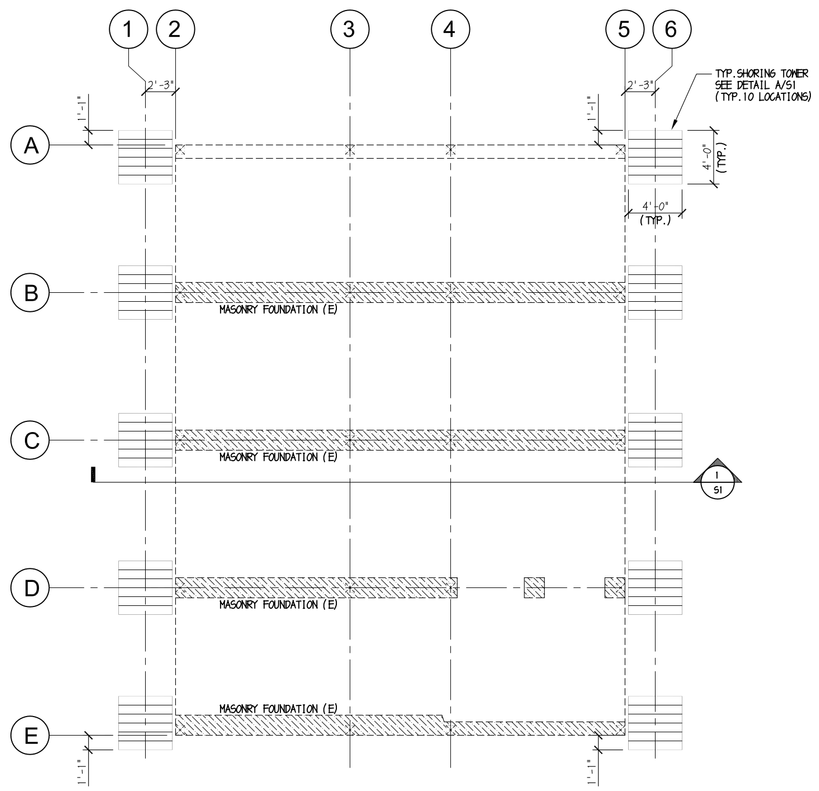

NORTH

P1 / S1 FOUNDATION PLAN
SCALE : 1/8" = 1'-0"

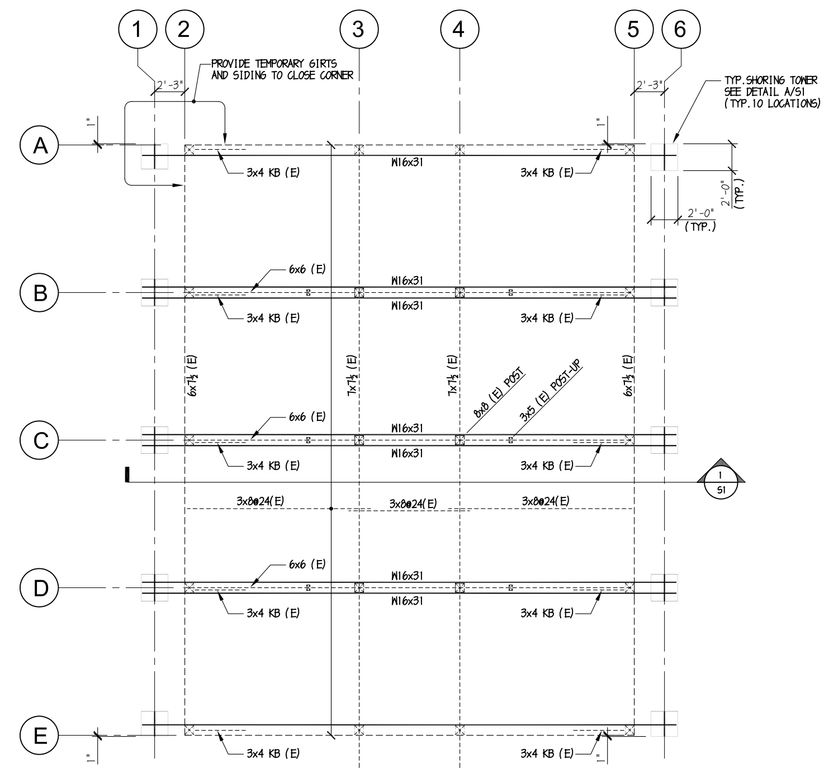

NORTH

P2 / S1 SECOND FLOOR FRAMING
SCALE : 1/8" = 1'-0"

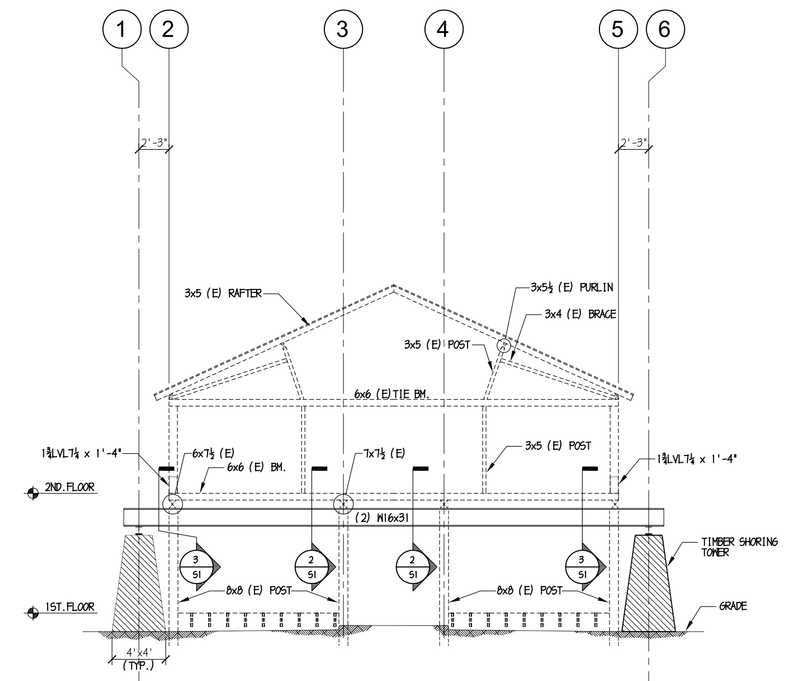

1 / S1 SECTION
SCALE : 1/8" = 1'-0"

GENERAL NOTES:

1. THE STRUCTURE IS DESIGNED TO BE SELF SUPPORTING AND STABLE AFTER THE BUILDING IS COMPLETE. IT IS THE CONTRACTOR'S SOLE RESPONSIBILITY TO DETERMINE ERECTION PROCEDURES AND SEQUENCE TO INSURE THE SAFETY OF THE BUILDING AND ITS COMPONENTS DURING ERECTION. THIS INCLUDES THE ADDITION OF NECESSARY SHORING, SHEETING, TEMPORARY BRACING, GUYS OR TIEDOWNS. PROVIDE ALL SHORING AND BRACING REQUIRED TO STABILIZE AND PROTECT EXISTING AND ADJACENT STRUCTURES AND SYSTEMS DURING COURSE OF DEMOLITION AND CONSTRUCTION. SUCH MATERIAL SHALL REMAIN THE PROPERTY OF THE CONTRACTOR AFTER COMPLETION OF THE PROJECT.
2. SECTIONS AND DETAILS SHOWN ON ANY STRUCTURAL DRAWINGS SHALL BE CONSIDERED TYPICAL FOR SIMILAR CONDITIONS.
3. ALL APPLICABLE FEDERAL, STATE AND MUNICIPAL REGULATIONS SHALL BE FOLLOWED, INCLUDING THE FEDERAL DEPARTMENT OF LABOR OCCUPATIONAL SAFETY AND HEALTH ACT.

DESIGN LOADS:

1. BUILDING CODE: INTERNATIONAL BUILDING CODE (2003 EDITION).
2. DESIGN CRITERIA:

ROOF	16 PSF MIN. + DRIFT
FLOOR	20 PSF

TIMBER:

1. TIMBER SIZES SHOWN ON DRAWINGS ARE APPROXIMATE. CONTRACTOR TO SUPPLY FRAMING THAT MATCHES ORIGINAL SIZE.
2. ALL STRUCTURAL TIMBER USED FOR FRAMING SHALL BE HEM-FIR "SELECT STRUCTURAL" STRESS GRADE LUMBER OR APPROVED EQUAL WITH THE FOLLOWING MINIMUM ALLOWABLE PROPERTIES:

   Fb = 1400 PSI Fv = 75 PSI E = 1,600,000 PSI

   ALL STRUCTURAL TIMBER TO BE STAMPED IN ACCORDANCE WITH THE AMERICAN INSTITUTE OF TIMBER CONSTRUCTION'S "CONSTRUCTION MANUAL".
3. PLYWOOD TO BE ⅜" APA STRUCTURAL I RATED SHEATHING, EXTERIOR GRADE.
4. PRESSURE TREAT SAWN WOOD MEMBERS WITH CHROMATED COPPER ARSENATE (CCA). RETAIN 0.6/POUNDS OF CCA PER CUBIC FOOT OF TIMBER TREATED.
5. ALL TIMBER AND TIMBER CONSTRUCTION SHALL COMPLY WITH SPECIFICATIONS AND CODES AS SPECIFIED BELOW:
   - A. AMERICAN INSTITUTE OF TIMBER CONSTRUCTION: TIMBER CONSTRUCTION MANUAL.
   - B. AMERICAN FOREST AND PAPER ASSOCIATION. NATIONAL DESIGN SPECIFICATION FOR WOOD CONSTRUCTION.
   - C. AMERICAN PLYWOOD ASSOCIATION: PLYWOOD DESIGN SPECIFICATION.
   - D. AMERICAN WOOD PRESERVERS ASSOCIATION STANDARDS.

STRUCTURAL STEEL:

1. STRUCTURAL STEEL FABRICATION, ERECTION, AND CONNECTION DESIGN SHALL CONFORM TO AISC "SPECIFICATION FOR THE DESIGN, FABRICATION, AND ERECTION OF STRUCTURAL STEEL FOR BUILDINGS" LATEST EDITION.
2. ALL STEEL SHALL CONFORM TO ASTM A36 UNLESS NOTED OTHERWISE.
3. FIELD CONNECTIONS SHALL BE BOLTED USING ¾" DIAMETER ASTM A325N HIGH STRENGTH BOLTS (UNO).
4. ALL WELDING SHALL CONFORM TO AWS D1.1-LATEST EDITION. ELECTRODES SHALL BE E70XX.
5. SUBMIT ALL STEEL SHOP DRAWINGS FOR APPROVAL PRIOR TO ANY FABRICATION.
6. STEEL FABRICATOR IS SOLELY RESPONSIBLE FOR SURVEYING AND VERIFICATION OF EXISTING CONDITIONS INCLUDING, BUT NOT LIMITED TO THE LOCATION, ELEVATION, AND DIMENSIONS OF EXISTING WALLS AND FRAMING.
7. THERE SHALL BE NO FIELD CUTTING OF STRUCTURAL STEEL MEMBERS FOR THE WORK OF OTHER TRADES WITHOUT THE PRIOR APPROVAL OF THE DESIGN PROFESSIONAL.
8. ALL PERMANENT STEEL SHALL BE PAINTED WITH THE FABRICATOR'S RUST INHIBITIVE PRIMER.

SUGGESTED CONSTRUCTION SEQUENCE:

1. CONSTRUCT SHORING TOWERS AND INSTALL STEEL NEEDLE BEAMS.
2. ATTACH SHEAR BLOCKS TO POSTS AT TOP OF SECOND FLOOR BEAMS AT LINES "2" AND "5".
3. POSITION JACKS AND LIFT STEEL BEAMS TO ACHIEVE LEVEL ALIGNMENT AND CONTACT WITH THE FOUR FLOOR BEAMS.
4. INSTALL FLANGE CLIPS TO BRACE TOP FLANGE OF NEEDLE BEAMS WITH TIMBER FLOOR BEAMS.
5. LIFT FLOOR BEAMS ONE INCH (1") AND INSTALL STEEL SHIM PLATES AT BEARING ON SHORING TOWER.
6. REMOVE LOOSE ROTTEN SIDING AT LOWER SECTION OF THE EXTERIOR WALLS. INSTALL GIRT ONTO EXTENDED SHORING TOWER BASE TIMBER. CLOSE BOTTOM OF WALL WITH PLYWOOD SHEATHING. EXTEND GIRTS AND SHEATH OPENINGS AT NORTHWEST CORNER OF BUILDING. APPLY BATTENS AND PAINT TO MATCH ADJACENT SURFACES TO REMAIN.

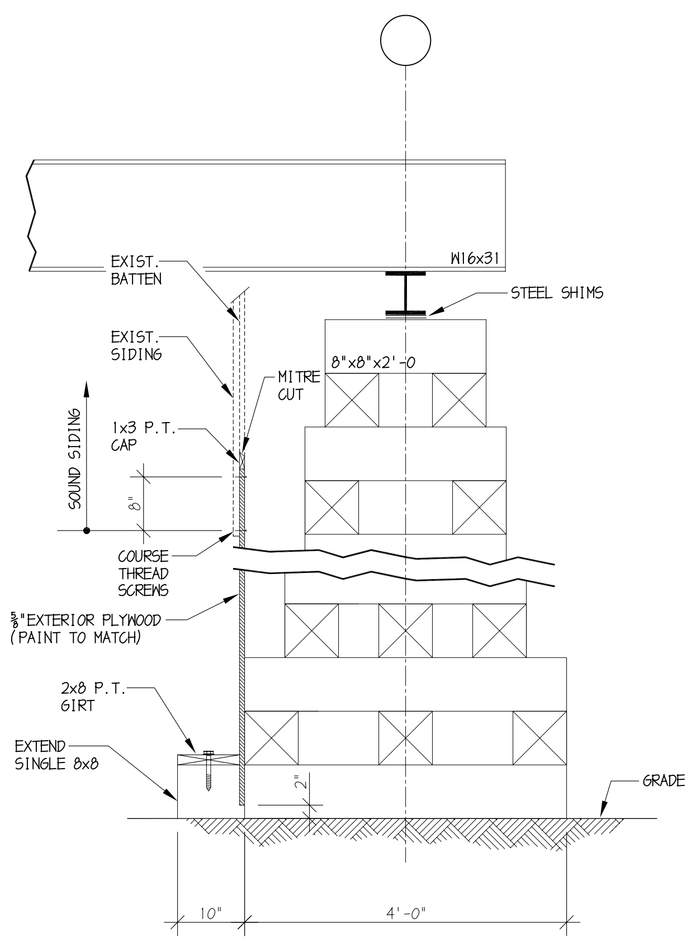

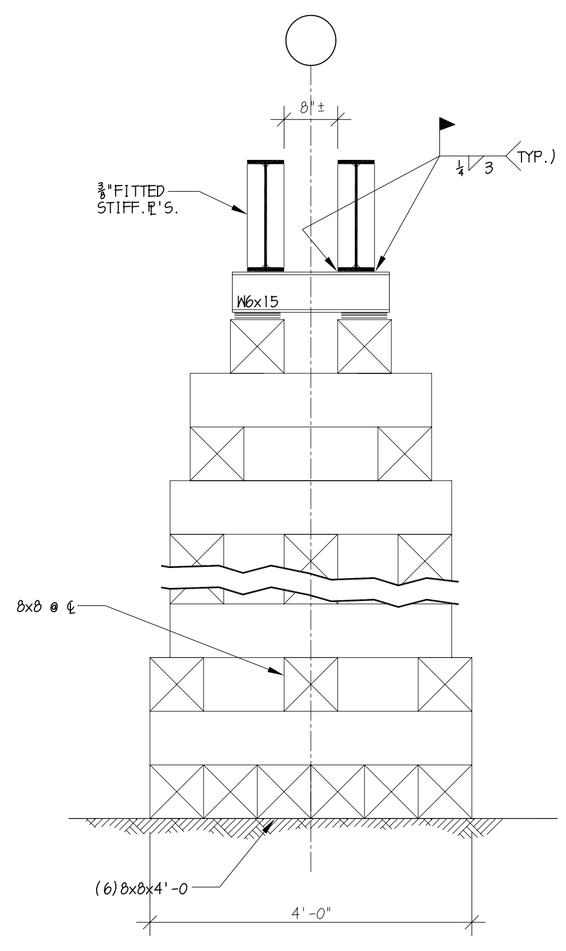

A / S1 TYP. SHORING TOWER
SCALE : ¾" = 1'-0"

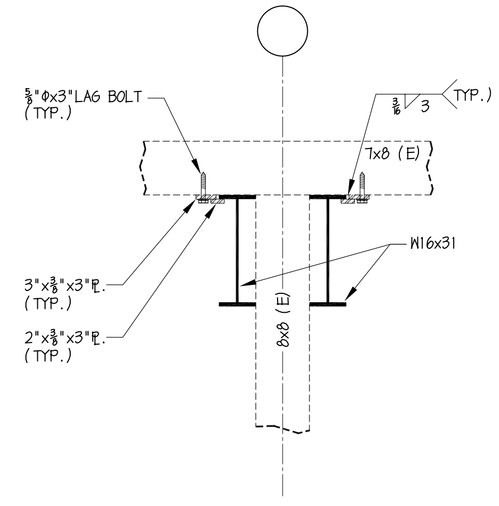

2 / S1 SECTION
SCALE : ¾" = 1'-0"

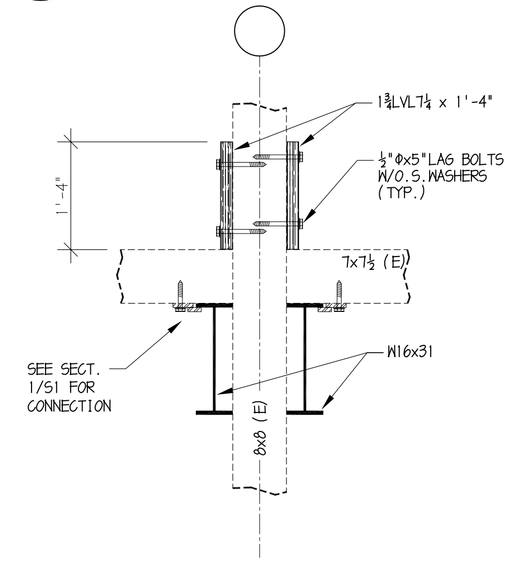

3 / S1 SECTION
SCALE : ¾" = 1'-0"

ISSUED FOR CONSTRUCTION
5/5/09

TEMPORARY SHORING
THE GRANARY
TURNER'S CREEK PUBLIC LANDING
KENNEDYVILLE, MARYLAND

NO.	REVISION	DATE BY

GREDELL & ASSOCIATES
STRUCTURAL ENGINEERS
P.O. BOX 357 · NEWARK, DELAWARE 19715-0357 · 302-731-5060

APPROVED BY

DESIGNED BY: GWG	DATE: 5/5/09
DRAWN BY: BWD	SCALE: AS NOTED
CHECKED BY: GWG	W.O.: XXXX
DRAWING NO.: S-1	SHEET: 1 of 1

© 2009 GREDELL & ASSOCIATES